A-MECH PROBLEM

Assembly Drawings. A drawing of a completely assembled construction is called an *assembly drawing*. Such drawings vary greatly in respect to completeness of detail and dimensioning. Their particular value is in showing the way in which the parts go together, to show the appearance of the construction as a whole, and to give dimensions necessary for installation, space necessary, foundation, electrical or hydraulic connections, and so forth. When complete information is given, assembly drawings may be used for working drawings. This is possible when there is little or no complex detail; Fig. 11–10 shows such a drawing. Furniture and other wood construction can often be shown in assembly working drawings by adding necessary enlarged details or partial views (Fig. 11–11).

Assembly drawings of machines are generally made to small scale. They have selected dimensions to tell overall distances, important center-to-center distances, and local dimensions. All, or almost all, hidden lines may be left out; and if drawn to a very small scale, unnecessary detail may be omitted (Fig. 11–12 is an example). Either exterior or sectional views may be used. When the general appearance is the main purpose of the drawing, only one or two views need be used. Because of the size of some assembled constructions, it may be necessary to draw different views of the assembly on separate sheets. The same scale should be used on all sheets.

A special assembly drawing (Fig. 11–13) is made for reference to identify parts to be used for assembly. Note the tabular list in the upper right-hand corner. Note also the selection of dimensions given on the drawing.

Many other kinds of assembly drawings are made for special purposes: part assemblies for a group of parts, drawings for use in assembling or erecting a machine, drawings to give directions for maintenance and

NOTE: ALL DIMENSIONS ARE TO BE DECIMAL TO 3 PLACES

Fig. 11–10 An assembly working drawing for a belt tightener.

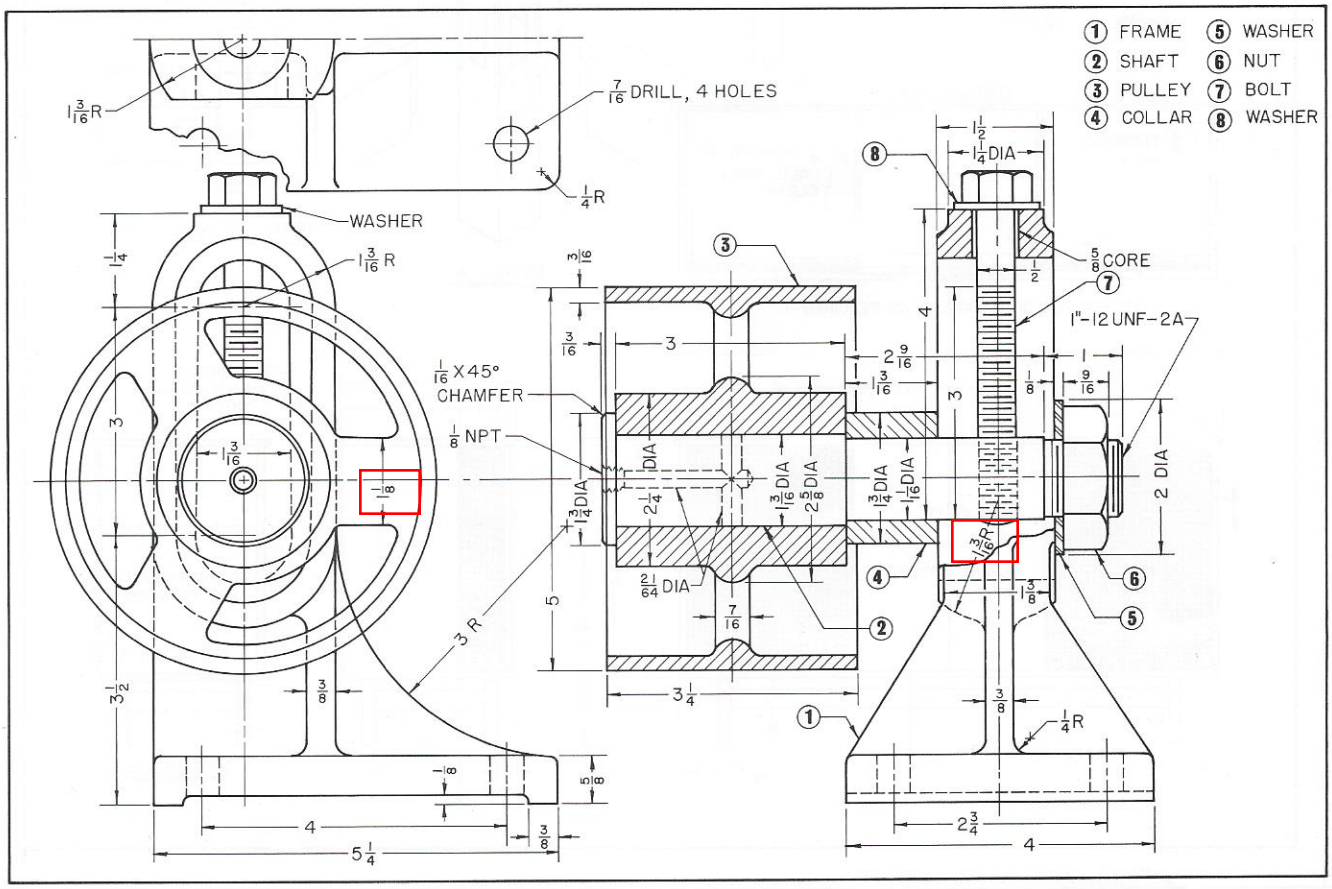

MATERIALS FOR ITEMS DEPICTED
ITEM 1: ASTM A743 CAST STEEL
ITEM 2: ASTM A743 CAST STEEL
ITEM 3: ASTM A743 CAST STEEL
ITEM 4: ASTM A743 CAST STEEL
ITEM 5: 1" PLAIN TYPE A WASHER SERIES N ANSI B18.22
ITEM 6: 1"-12 UNF-2B HEAVY HEX JAM NUT ANSI B18.22
ITEM 7: ANSI/SAE 1060 CRS
ITEM 8: 1/2" PLAIN TYPE B WASHER ANSI B18.22

HINTS:
1. 1.125" DIMENSION LOCATES R3.000"
2. R1.188" IS BASED OFF MACHINED FACE OF ITEM 1 AND R.250" FILLET
3. 3 VIEWS SHOULD BE USED FOR ITEM 1
4. ITEM 7 THREADS INTO ITEM 2 USING 1/2"-20 UNF-2A

GD&T SHOULD BE APPLIED TO ITEMS 2, 3 AND 4. TOLERANCES SHOULD BE CONSIDERED

CONSIDER MACHINED SURFACES FOR ITEM 1 WITH 125 FINISH AS REQD
FOR ITEMS 2,3 AND 4 CONSIDER MACHINED SURFACES WITH 63 FINISH AS REQD